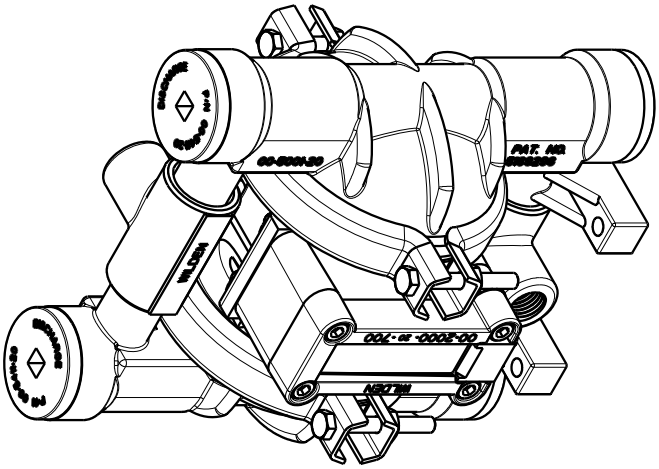
PNT. AIR
CO-2000-20
CO-2000-20-700
MILDEN
WILSON