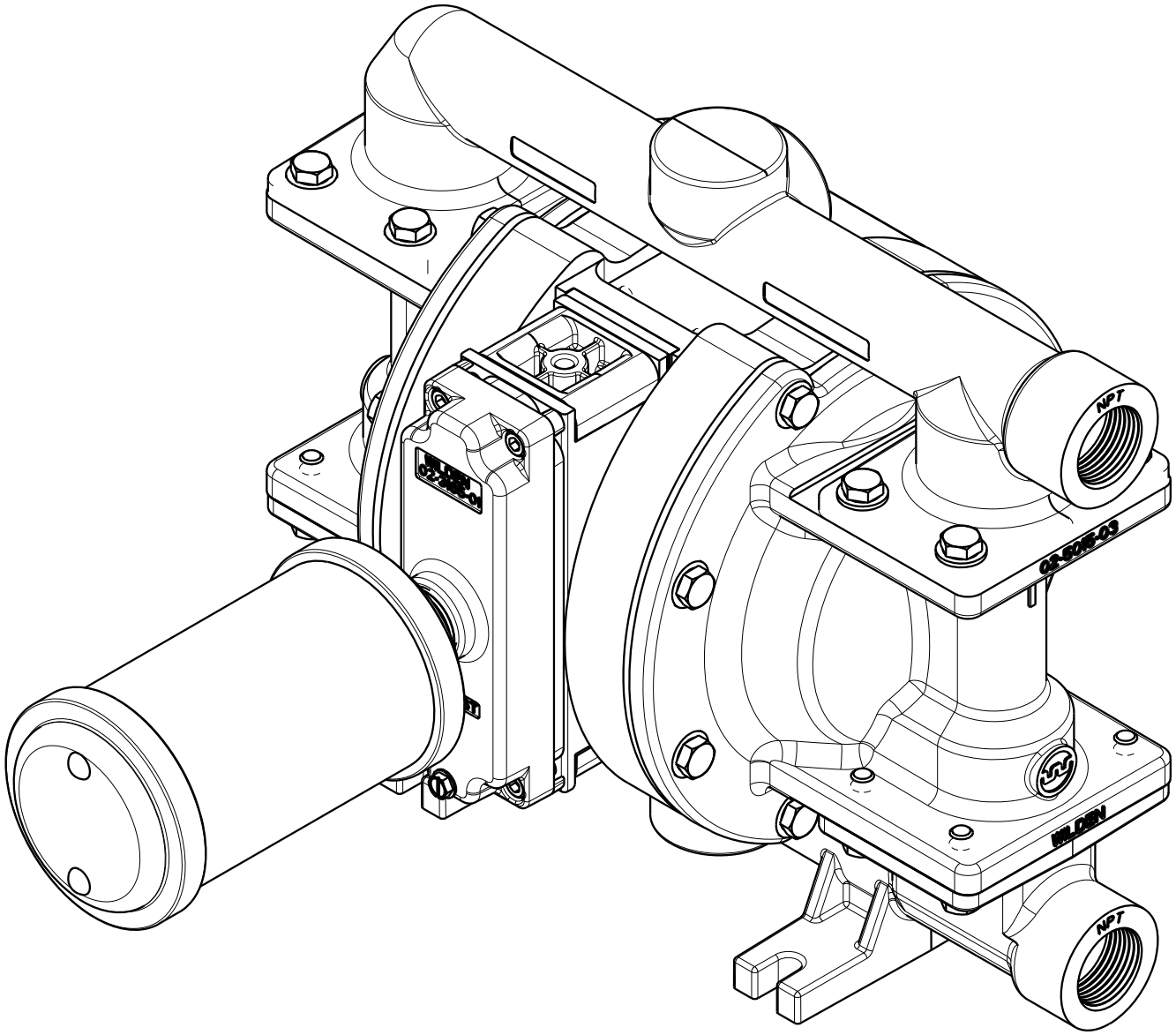
NPT
02-5092-03
WILDEN
NPT