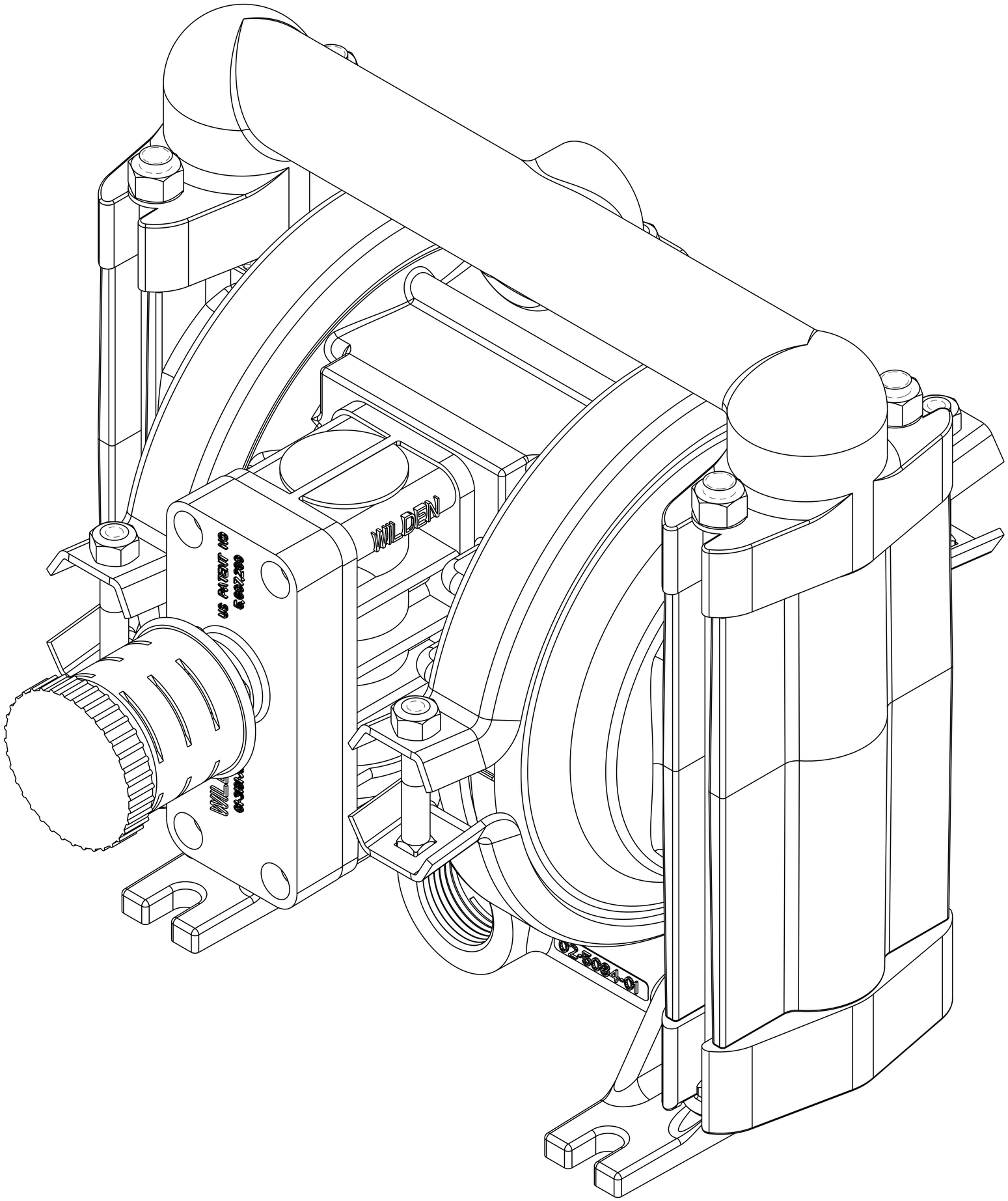
WILDEN
US PATENT NO
6,602,290
V2-500A-01