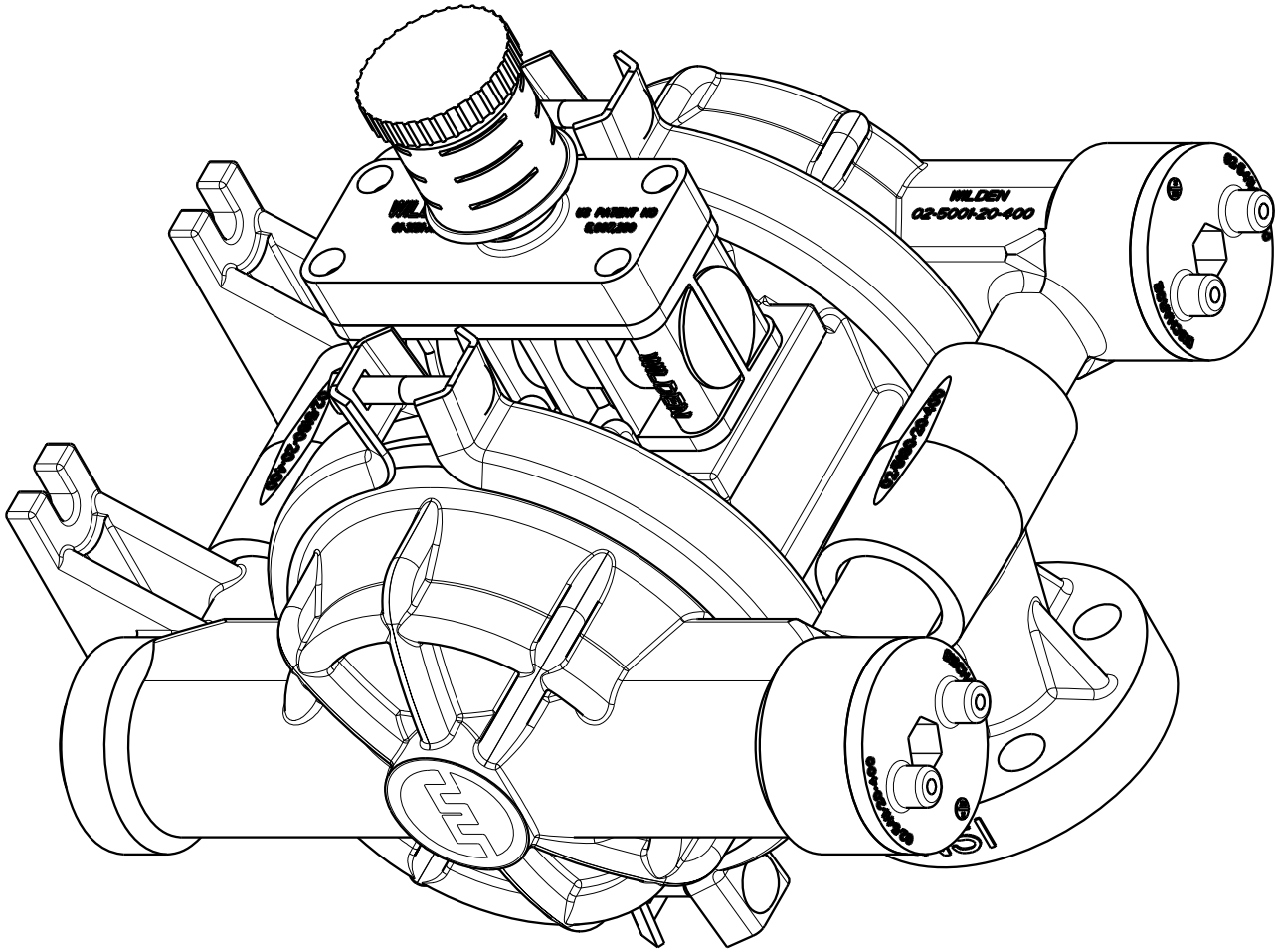
WILDEN
02-5001-20-400