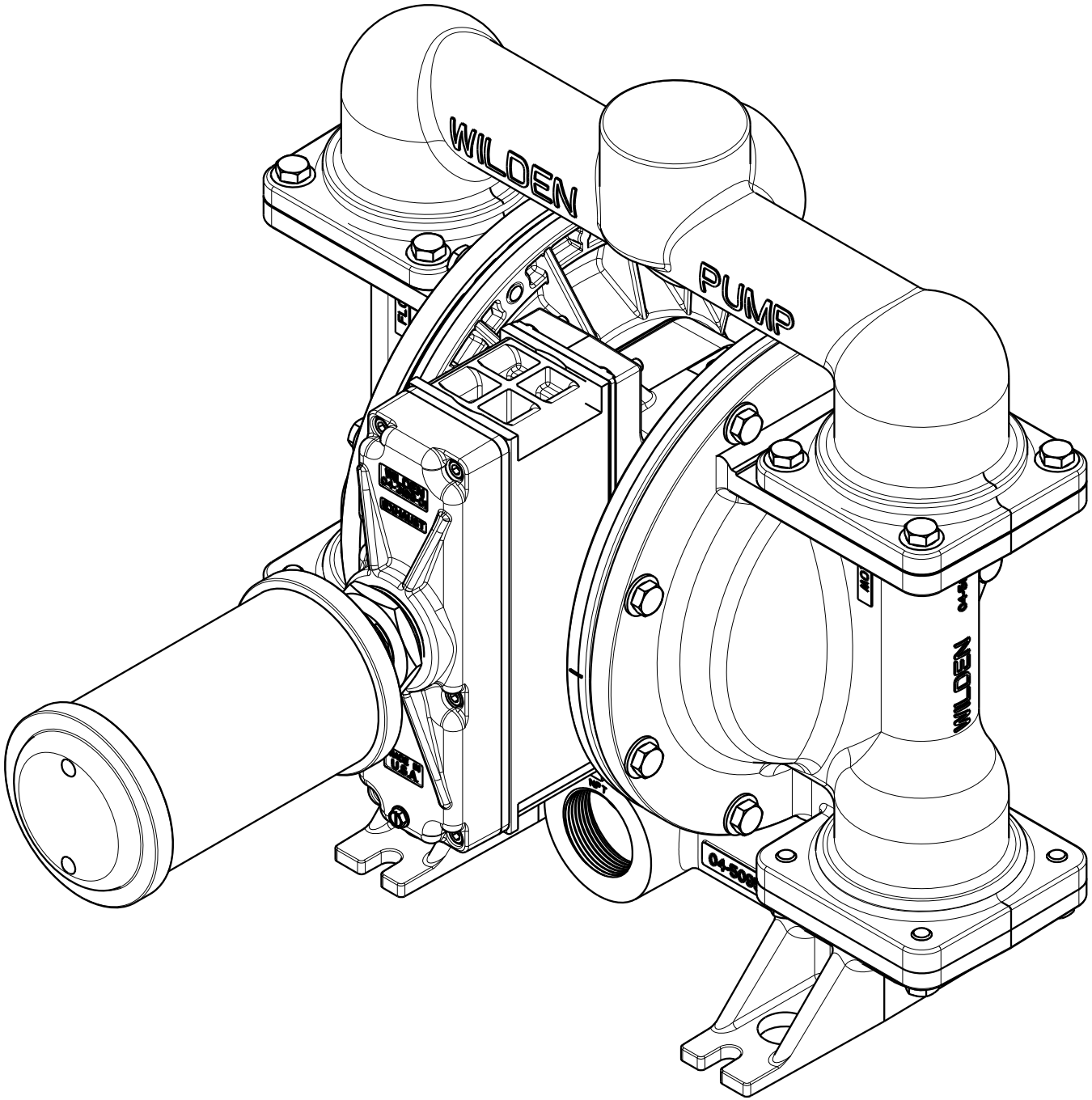
WILDEN
PUMP
WILDEN
3-4"
CW
U.S.A.
NPT
04-5000