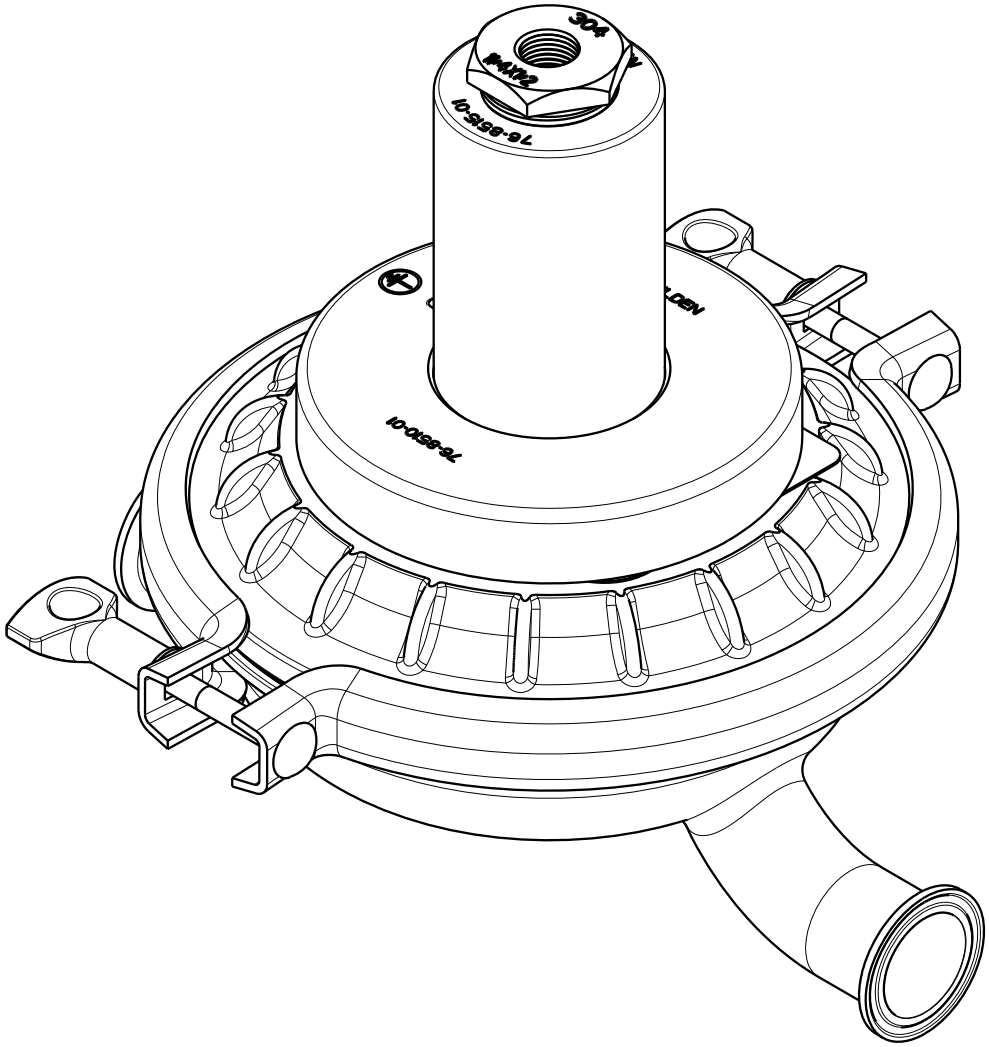
76-6510-01
76-6515-01
304
#4102