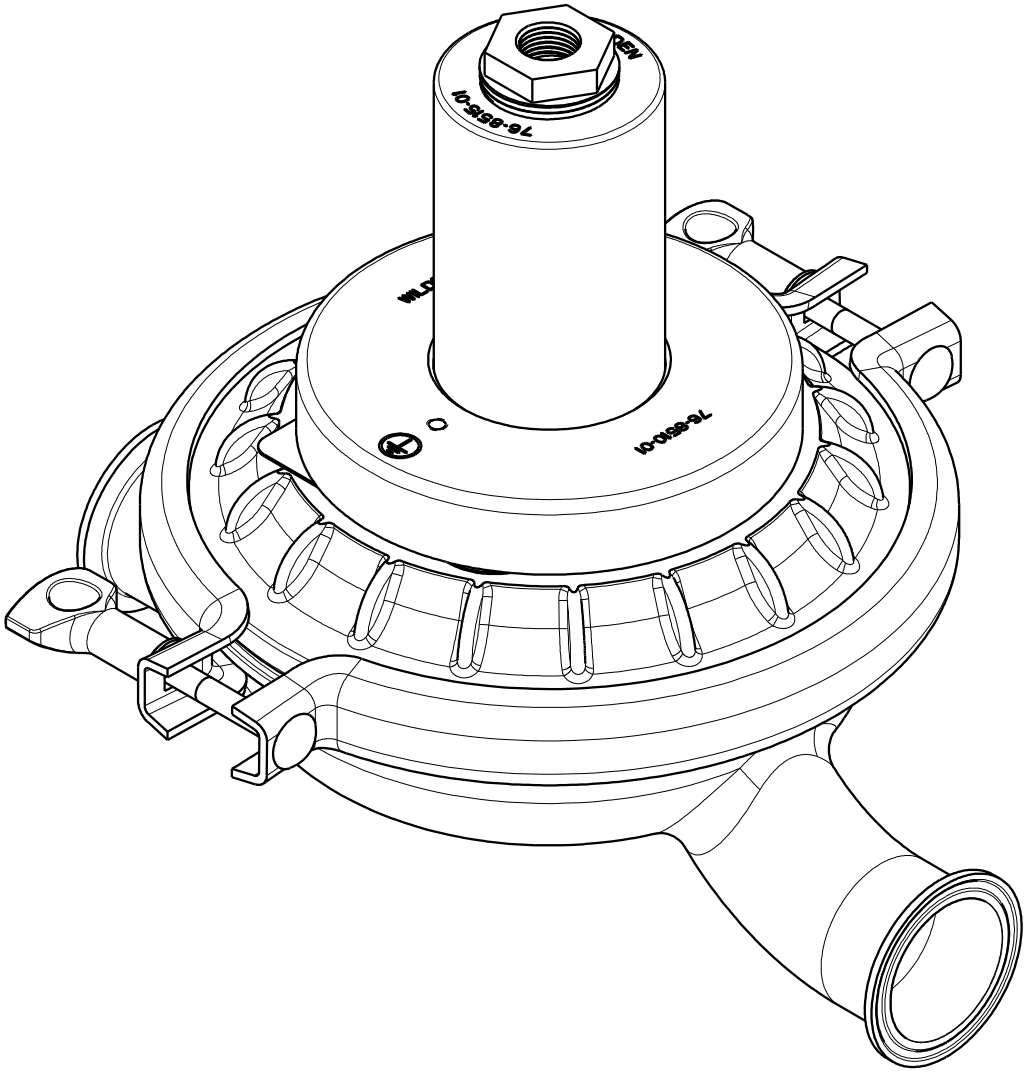
76-890-01
76-856-01