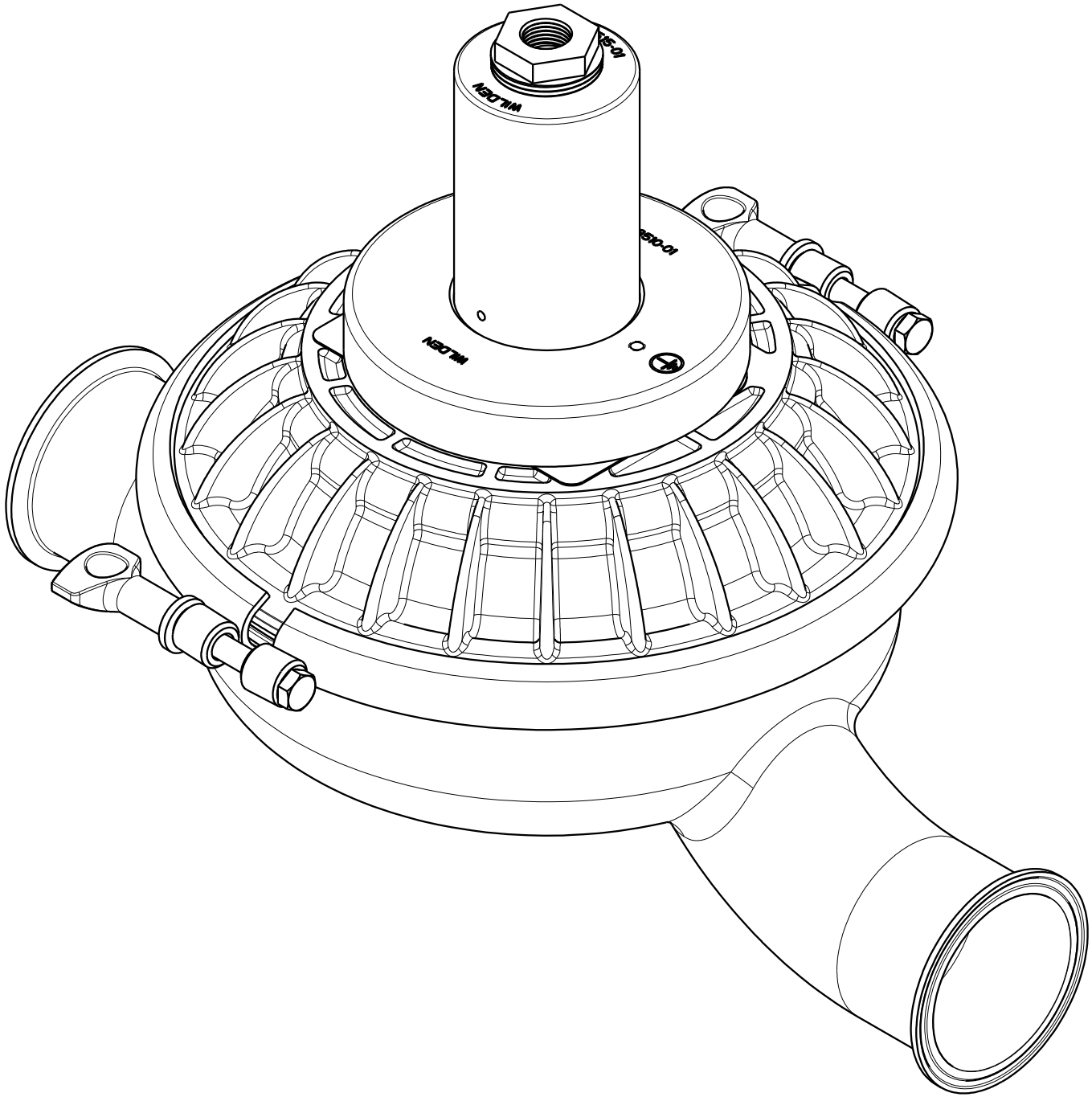
WILDEN
WILDEN
10-0360-01
15-01