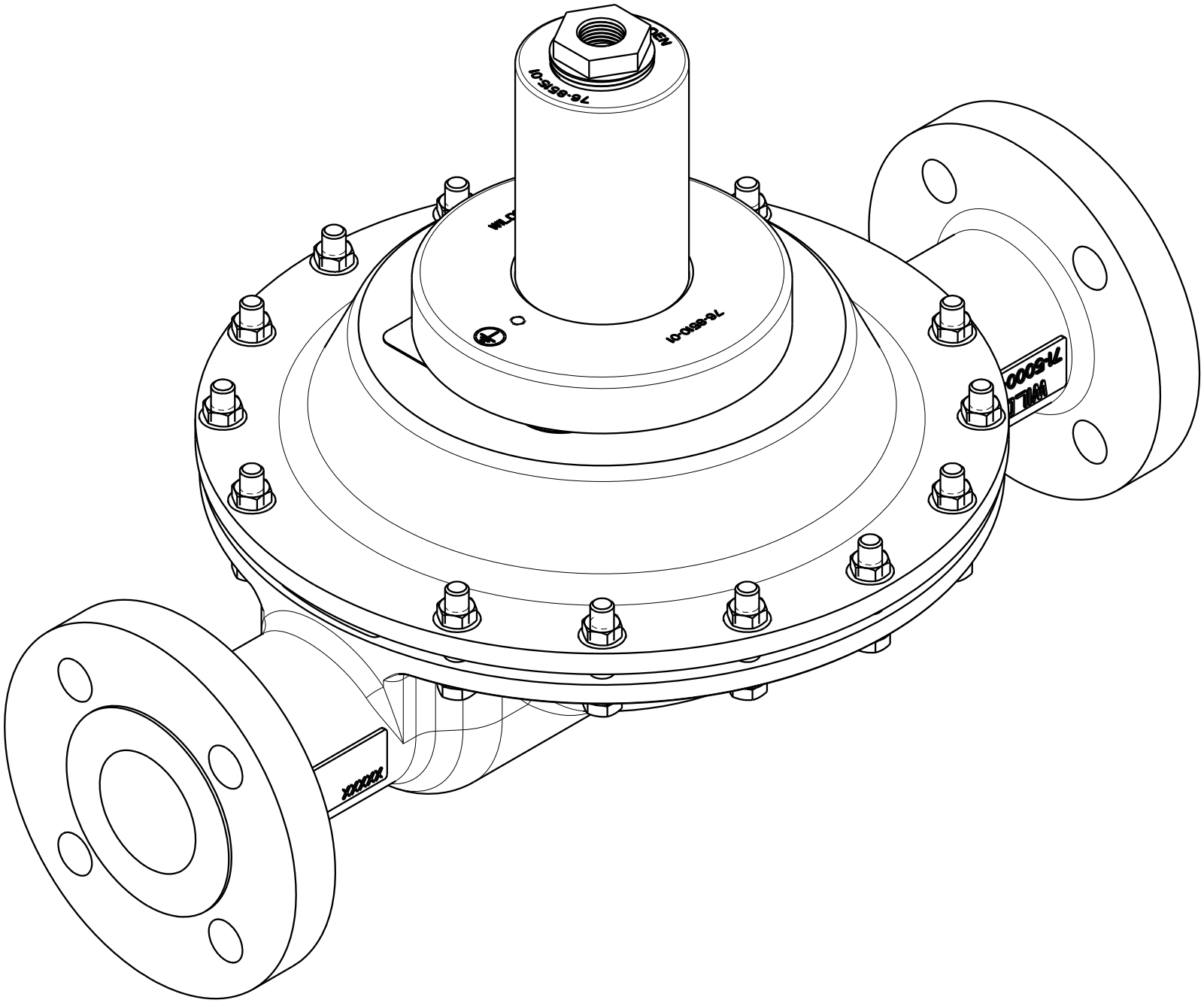
XXXXX
76-8310-01
76-8315-01