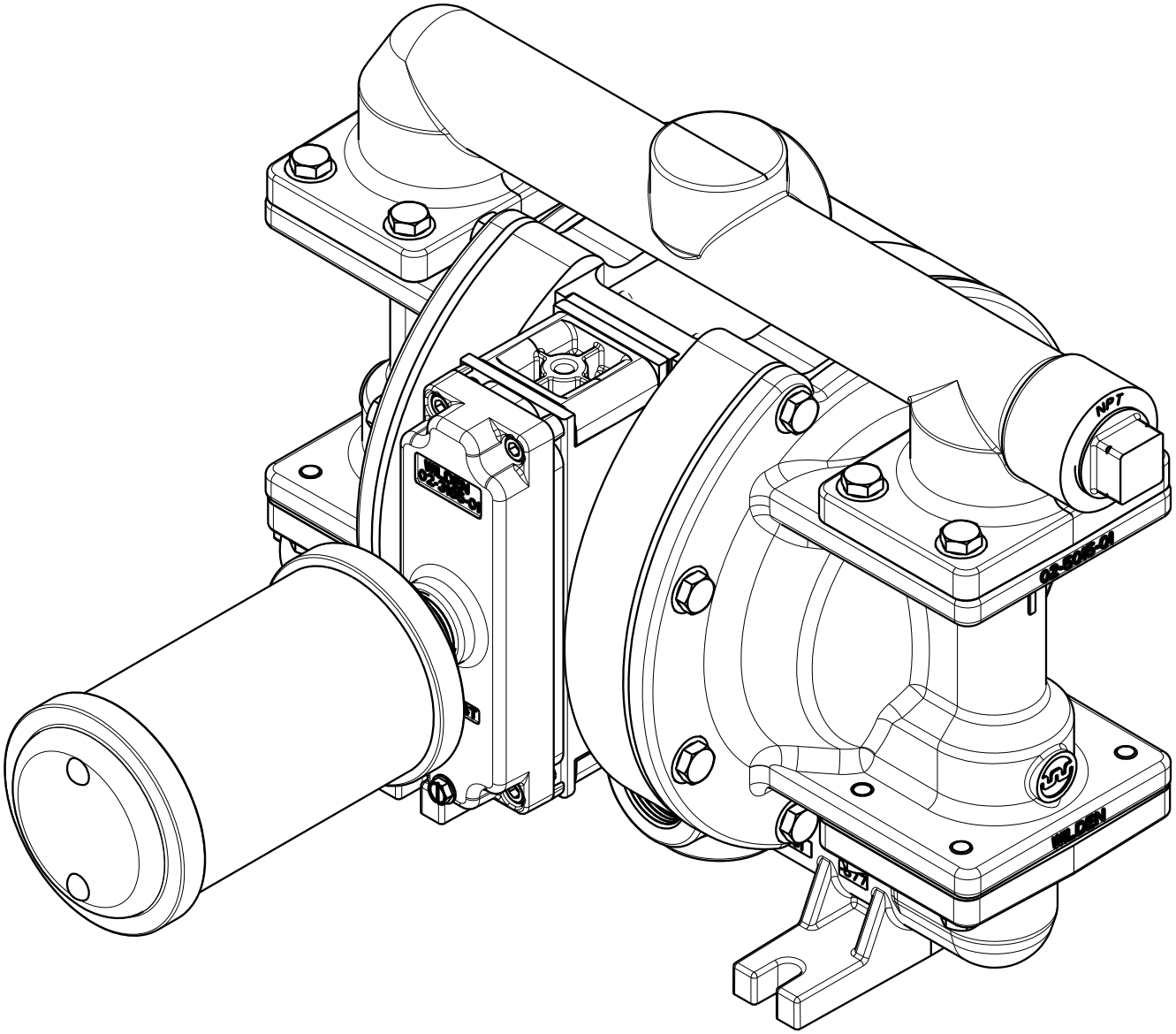
NPT
WILDEN