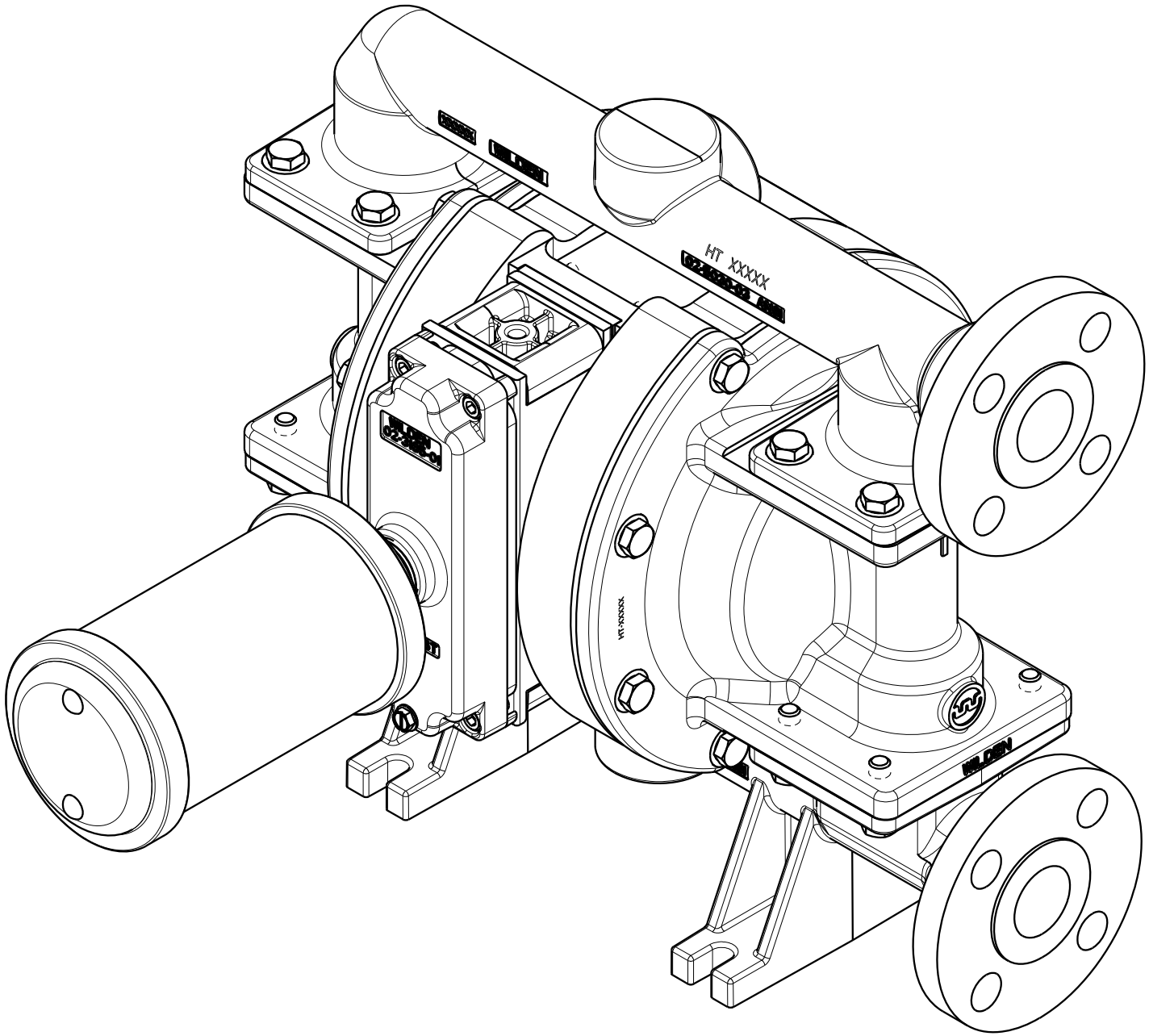
HT XXXXX
HT-XXXXX
WILDEN